VAGLIENTI BEAUTÉ

SONIC CLEANSE

Silicone facial cleansing brush

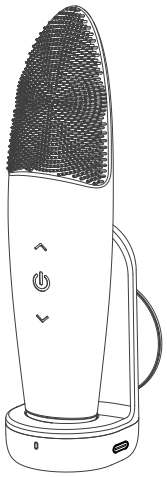

Sonic Cleanse is a silicone facial cleansing brush designed for daily cleansing, light massage and gentle exfoliation. It combines a flexible angled head, sonic vibrations, gentle warmth up to 55 °C, eight intensity levels, two skincare modes and a magnetic induction charging base with a suction cup. With IPX7 water resistance, it is designed for bathroom use (rinsing and brief immersion).

Important

- Read this manual in full before first use and keep it for future reference.
- Sonic Cleanse is designed for an at-home beauty routine. If you have particular sensitivities, have recently had skin treatment or are unsure about using it, seek advice from a healthcare professional.
- Do not use the device while charging.
- Do not use on skin that is irritated, injured, infected, swollen, painful, sunburnt or has recently received medical treatment.
- Stop immediately if you experience pain, irritation, persistent redness or any unusual sensation.

1. Quick start

01

Prepare the skin

Dampen your face and apply a suitable cleanser.

02

Choose the mode

Choose gentle cleansing or exfoliation to suit your needs.

03

Adjust the intensity

Start low, then increase gradually as comfort allows.

04

Glide

Massage without excessive pressure, avoiding the eyes and mucous membranes.

05

Rinse

Rinse your face, then rinse the silicone head with clean water.

06

Dry and store

Dry thoroughly, then return to the base if needed.

2. Device overview

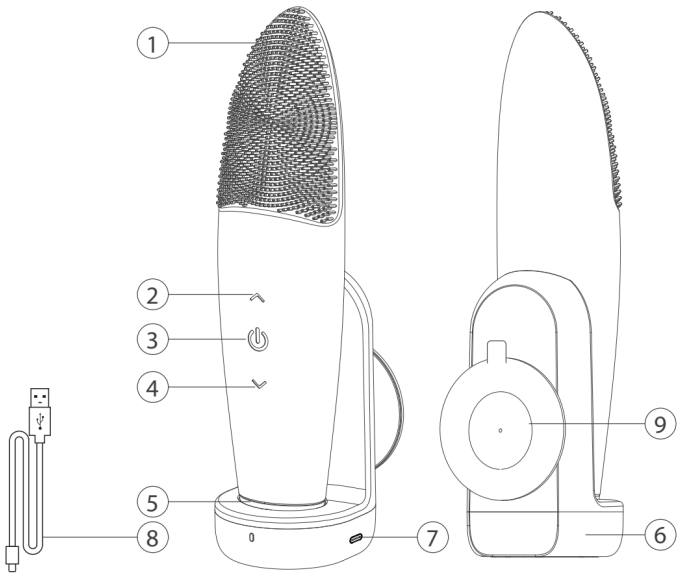

Reference	Item
1	Silicone head: cleansing, massage and exfoliation area.
2	+ button: increases the intensity.
3	Power / mode button: switches the device on and off and changes the mode.
4	- button: decreases the intensity.
5	Indicator light: shows the mode, charging and battery status.
6	Magnetic induction charging base.
7	Charging port.
8	USB cable.
9	Suction cup: secures the base to a mirror or smooth surface.

Box contents

Sonic Cleanse device	Included
Magnetic induction charging base with suction cup	Included
USB cable	Included
Storage pouch	Included
Cleaning cloth	Included

3. Main functions

Function	Description
Sonic vibration	High-frequency sonic vibration, approximately 15 000 rpm, to support cleansing and help gently loosen impurities.
Flexible head	Flexible head angled at 30° to follow the contours of the face.
Bristles	Ultra-fine silicone bristles designed to create a fine lather and support cleansing without irritating the skin.
Warmth	Gentle warmth up to 55 °C for a more comfortable ritual and to support skincare application.
Modes	Two skincare modes: gentle cleansing and deep exfoliation.
Intensity levels	Eight intensity levels to adapt the routine to your skin's sensitivity.
Charging	Magnetic induction charging base with suction cup, convenient for storage and charging.
Protection	IPX7 protection: the device can be rinsed after use, without prolonged immersion.

4. Modes, indicators and intensity levels

Sonic Cleanse offers two skincare modes. Use the power / mode button to switch the device on, select the mode and end the session.

- Intensities 1 to 4: ideal for skin that is sensitive, dry or prone to oiliness.
- Intensities 4 to 8: suitable for normal to combination skin.
- If you have spots or inflammation, start with intensities 1 or 2.

Function	Indication
Gentle cleansing mode	Starts with a gentle vibration. Suitable for daily cleansing and more sensitive skin.
Deep exfoliation mode	Activates a more intense vibration. Suitable for deeper cleansing, depending on your skin's tolerance.
Speed adjustment	Press + or - to adjust the intensity across 8 levels.
Low battery	The indicator flashes when the battery is low.
Charging in progress	The indicator light flashes during charging.
Full charge	The indicator stays on steadily when fully charged.

5. Before first use

- Fully charge the device before first use.
- Check that the silicone head is clean, intact and free from cracks.
- Cleanse your face and remove make-up, jewellery, glasses or metal objects near the treatment area.
- Apply a suitable facial cleanser or dampen the head, depending on the selected mode.
- Start with a low intensity, then increase gradually as comfort allows.

6. Step-by-step use

01



Dampen

Dampen your face.

02



Apply

Apply the cleanser to the silicone head.

03



Switch on

Switch on the device and select the desired mode.

04



Lather

If needed, lather for a few seconds in the palm of your hand.

05



Choose the intensity

Select the intensity, then follow the contours of your face.

06



Change the mode

Press briefly to switch to deep exfoliation mode.

07



Cleanse

Move the silicone head gently over your face.

08



Finish

Rinse, dry, then apply your usual skincare product.

7. Recommended frequency by skin type

Skin type	Suggested frequency	Starting intensity	Advice
Normal to combination	2 times per week	Low to medium level	Increase gradually if your skin tolerates it well.
Dry or sensitive	1 to 2 times per week	Level 1 or 2	Use gentle movements and reduce the duration if discomfort occurs.
Oily or blemish-prone	2 to 3 times per week	Low, then medium level	Avoid inflamed areas and do not linger in one place.

Start with the gentlest intensity. Sensitive skin should use the lowest frequency and reduce the duration if discomfort occurs.

8. Cleaning, care and storage

- Switch off the device before cleaning.
- Rinse the silicone head with clean water to remove cleanser, serum or cream residue.
- Wipe the device body with a soft cloth if needed.
- Dry thoroughly before storing or recharging.
- Clean the charging base with a dry or slightly damp cloth, without immersing it.
- Never immerse the device in water for a prolonged period.
- Do not use solvents, abrasive products or harsh detergents.

9. Charging and battery life

Charging time	Approximately 2 to 3 h
Battery life	Approximately 60 min
Charging	Magnetic induction base with USB cable
Battery care	Recharge approximately every 3 months during prolonged periods of non-use.

- Connect the USB cable to a suitable 5 V power supply.
- Connect the cable to the charging base.
- Position Sonic Cleanse correctly on the magnetic induction base.
- Do not place metal objects on the charging base.
- Do not use the device while charging.

10. Precautions and contraindications

01



Do not leave the device unattended during use.

02

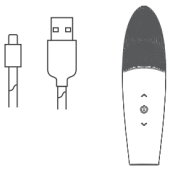

Do not use while charging.

03

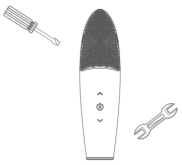

Do not disassemble the device.

04

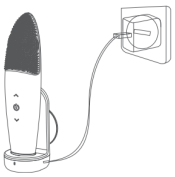

Place the device on its base connected to a USB power supply.

05

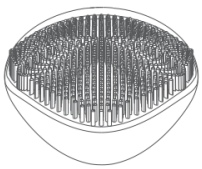

Do not use if the silicone head is damaged.

06



Check the cable and power supply before connecting.

- Keep out of reach of children.
- Do not use with granular, stripping or harsh exfoliating products.
- Avoid direct contact with the eyes, movable eyelids and mucous membranes.
- Do not linger too long on the same area.
- Do not share the device for hygiene reasons.
- Do not use if the silicone part is damaged.
- Do not switch on the device while charging.
- Do not disassemble, pierce, heat excessively or modify the device.
- Keep the device away from heat sources.

11. Quick troubleshooting

Situation	Possible causes	What to do
The device stops suddenly.	Low battery or a temporary fault.	Fully recharge, then switch on again. If the problem persists, contact customer service.
The vibration becomes weak.	Low battery.	Fully recharge the device, then try again.
The device does not charge.	Poor cable connection, insufficient base power or misplaced device.	Check the cable, 5 V power supply, base and device positioning.
No warmth can be felt.	Mode not selected, low battery or high ambient temperature.	Select the appropriate mode, recharge, then wait 1 to 2 minutes.

12. Technical specifications

Product name	SONIC CLEANSE
Type	Silicone facial cleansing brush
Modes	Gentle cleansing, deep exfoliation
Intensity levels	8 levels
Sonic vibration	Approximately 15 000 rpm
Warmth	Up to 55 °C
Charging	Magnetic induction base with USB cable
Charging time	Approximately 2 to 3 h
Battery life	Approximately 60 min
Material	Medical-grade silicone
Protection	IPX7

13. Recycling, guarantee and service

At the end of its life, do not dispose of the device with household waste. Take it to a suitable collection point for electrical and electronic equipment.

The CE, RoHS and recycling symbols indicate the requirements applicable to electrical and electronic equipment in the European Union.

Sonic Cleanse comes with a two-year commercial guarantee from the date of purchase, provided it is used in accordance with this manual.

The guarantee does not cover damage caused by dropping, prolonged immersion, disassembly, modification, an unsuitable power supply or non-compliant use.



14. Entity responsible for placing on the EU market

Item	Information
Entity responsible for EU market placement	Vaglienti Beauté
Postal address	1055 Budapest, Szent István körút 27., 1. em. 7. ajtó, Hungary
Contact	support@vaglienti-beaute.com
Product page	https://vaglienti-beaute.com/sonic-cleanse.html

Scan the QR code to find the Sonic Cleanse product page and updated information.